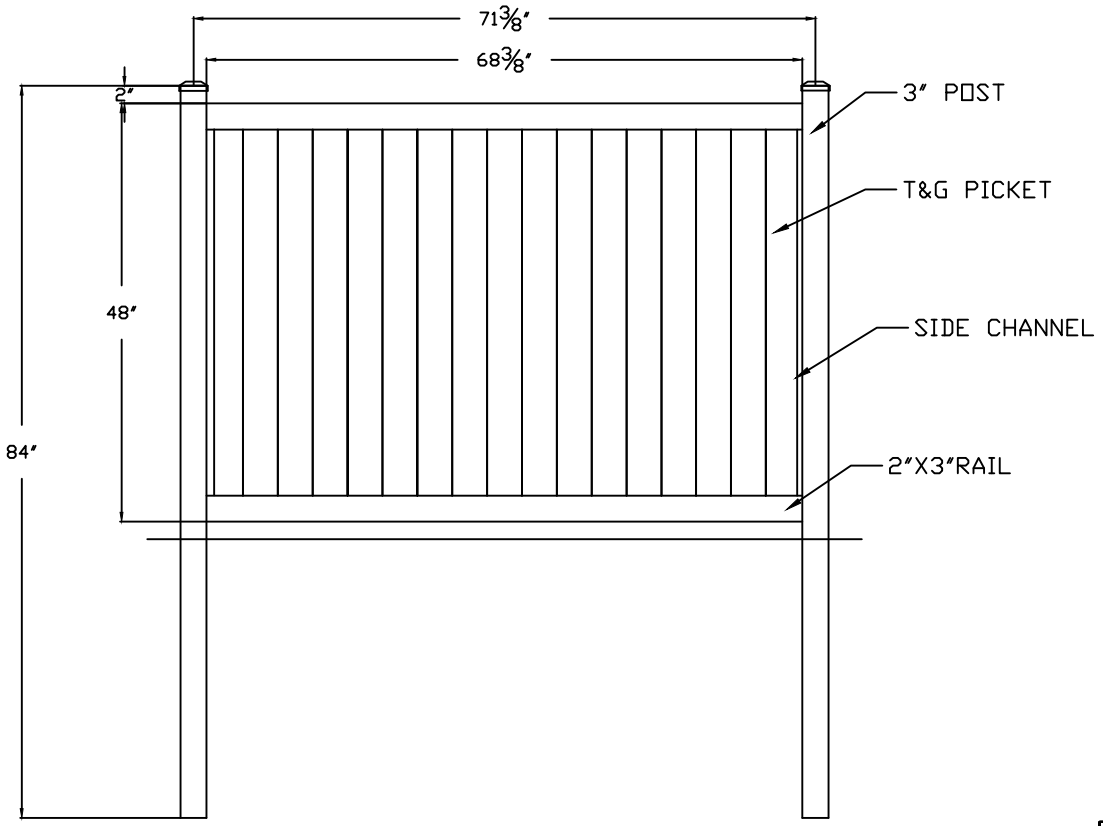

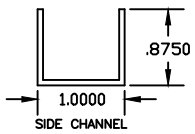

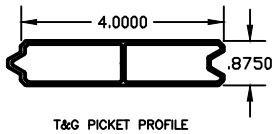

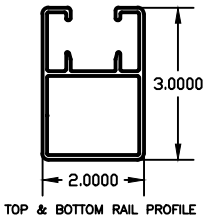

VANGUARD™
ALUMINUM FENCES

American Fence Systems Inc.
2279 South Clinton Avenue
South Plainfield, N.J. 07080

DRAWING
TYPE: VANGUARD
STYLE: VERITCAL PRIVACY
HEIGHT: 4'

DATE	DWG NO	REV
02/01/23	VTGVP4	
SCALE	SHEET	

FNAME
REVDATE
USER